WELCOME TO AN EXCITING CAREER OPPORTUNITY!

Karl Chehade Dry Cleaning
Position Application Package

KARL CHEHADE®
DRY CLEANING
Cleaner & Greener!

POSITION BRIEF

Thank you for your interest in working with Karl Chehade Dry Cleaning!

We have reached a very exciting period of growth and transformation, resulting in a need for an innovative, vibrant and motivated designer to work closely with our Retail Managers and transform our stores.

What we're looking for:

We're not looking for the designer with the most experience. We're looking for someone who is talented, motivated, innovative and looking to secure a permanent design position with an industry leader that thrives on the challenge of constant improvement. We're seeking to create the KCDC look to take us into the next ten years and the designs you create for Brisbane stores will flow through to Adelaide.

What we're offering:

* A full time position with a commencement salary package of $50k
* Contribution toward your relocation expenses, should that be necessary
* A promise of at least 25 individual projects for you to sink your teeth into
* Travel to sunny Brisbane with all expenses covered
* The full support of the company Director, the Retail Managers and the Operations Managers

What we're asking of you:

If this position interests you, we'd love to hear from you. We'd like to see your resume (don't worry if it doesn't include any design experience - we want to know about your professional history outside of design as well) but, more importantly, we'd like to see what you can do.

Overleaf you'll find a design brief. We'd like you to send us a draft design. Stick to be brief, but don't hold back. Dry cleaning doesn't have to be drab. Allow yourself to challenge the norm of service based retail spaces and show us how you can invigorate and innovate.

How to apply:

Collect your resume, your design and a brief cover letter, and e mail them to tclark@peerless.net.au by December 20th 2015.

We will review all applications and shortlisted applicants will be contacted for an interview.

If you have any questions, you're welcome to call Tara, QLD Retail Manager, on 0439 280 111 or e mail her at tclark@peerless.net.au

DESIGN BRIEF

COMPANY PROFILE

Karl Chehade Dry Cleaning (KCDC) is Australia's largest dry cleaning operation, with locations in Brisbane and Adelaide and the view to to be national. KCDC had its humble beginnings in North Adelaide in 1957. Firmly established in the clothing industry, we entered the dry cleaning industry to fill a gap in the quality end of the market. For over 50 years KCDC has continued this tradition and is established as Australia's largest premier dry cleaning operation.

KCDC performs each store's daily work at its modern centralised facilities. We use all the latest technology and environmentally friendly processes and systems, ensuring that all garments are cleaned to the highest standards available. Our dry cleaning is performed in GreenEarth technology - the only dry cleaning solvent considered so environmentally safe that it does not require regulation. The garments look brighter, feel softer and there's absolutely no dry cleaning odour.

OUR AIMS

Our retail locations will be:

* Designed with a ‘retail’ aesthetic in mind
* Bright and welcoming
* Clean, efficiently structured and easy to maintain
* Customer focussed with all work stations facing outward, and laid out so that staff can always see approaching customers

Our retail locations will include:

* Space dedicated to repairs and alterations
* Space for garment racking
* A change room for alterations
* Exterior placement for rotatable seasonal marketing (posters)

OUR TARGET AUDIENCE

Dry cleaning is a service utilised by people of all ages, races, professions and social demographics. Our principal demographic is females aged 35 to 54. While over 70% of our customers are female, up to 70% of our work is men’s clothing. Our stores must be attractive to females.

BUDGET AND TIME SCALE

In Brisbane there are approximately 25 locations that will require remodelling by the end of the 2017 calendar year. Our stores range in size from 25m2 to 50m2. Some have mall frontages and others can be entered from the street.

For the purpose of this brief, the first location requiring remodelling is located within a shopping centre. It is 31m2 with a mall frontage. A picture of this location can be found overleaf, with floor plans following. We aim to have this refurbishment completed by March 2016.

As we have a number of locations budget is of consideration however, at this stage, we would like to work toward what's possible and scale back if and where necessary. For the purpose of answering this brief budget is not a consideration.

DESIGN BRIEF

STYLE GUIDE

Our company colours can be seen in our logo and website and should be featured throughout the design.

Designers are encouraged to consider modern retail design concepts when seeking inspiration.

Our colours are Reflex Blue, Green PMS 3405 and Yellow PMS 123.

Our font is Helvetica Neue Condensed.

LOCATION

For the purpose of this brief, please put together your designs for the following store, which is currently branded as a Peerless Dry Cleaner. Your design will rebrand this location to a Karl Chehade Dry Cleaning store. Plans can be found overleaf:

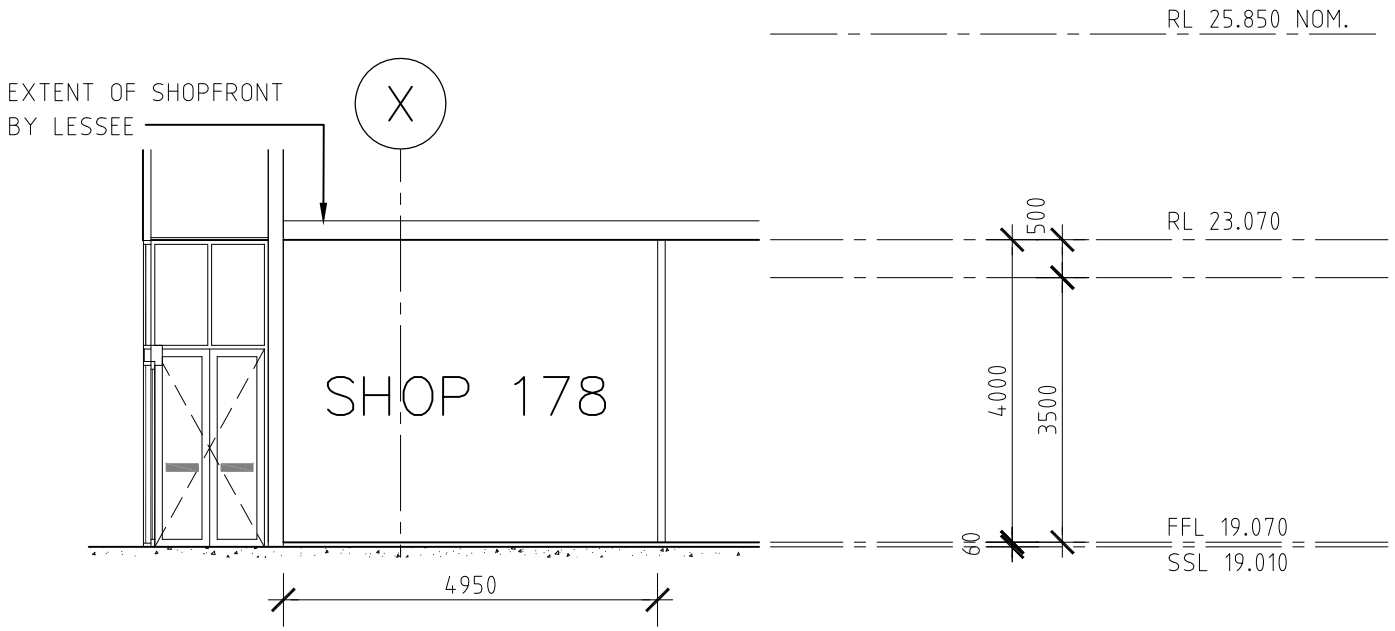

1 FRONT ELEVATION

1:100

CAD REF:-

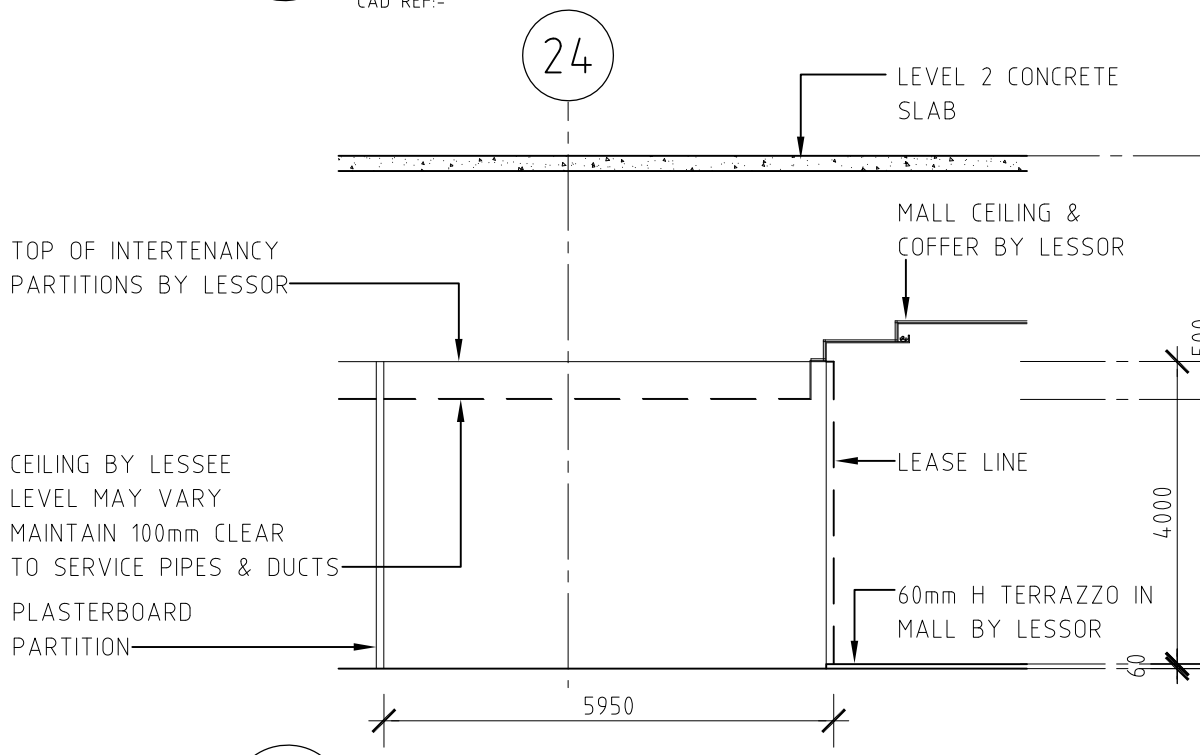

3 TYPICAL LONG SECTION

1:100

CAD REF:-

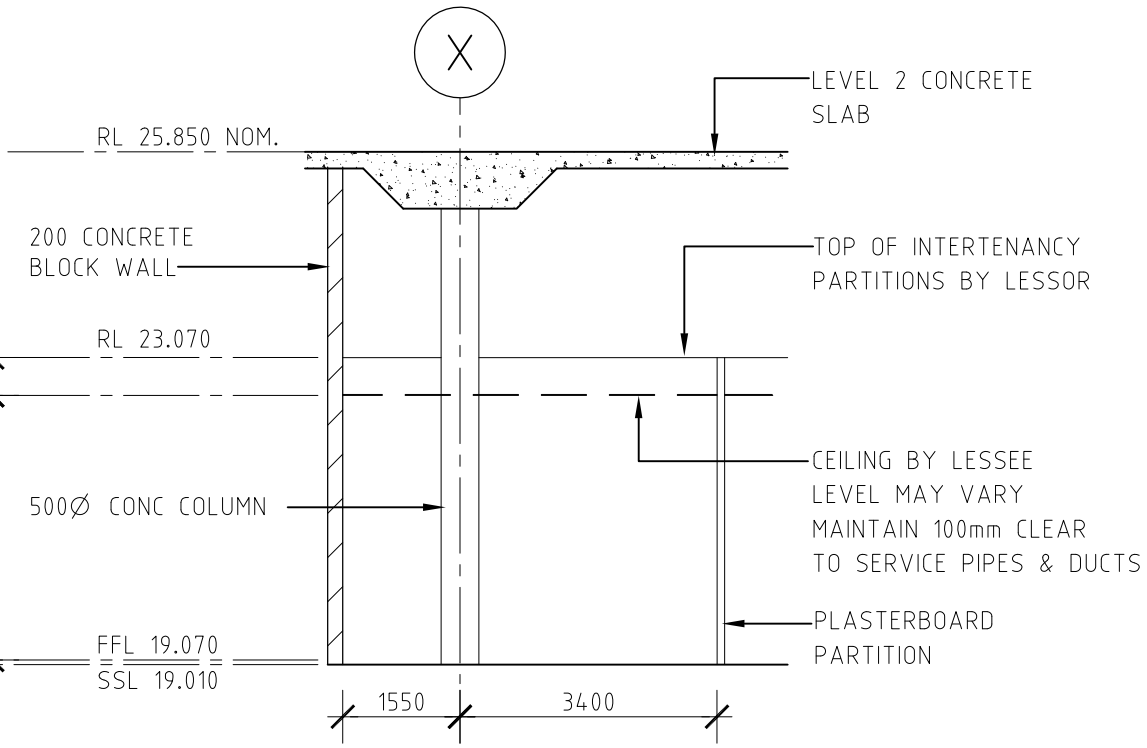

4 TYPICAL CROSS SECTION

1:100

CAD REF:-

MALL CEILING SUBJECT TO CHANGE

Lessee -		Phone -	Contact -		Phone -		
Item	**Work Required**			**Costed by**	**Westfield**	**Lessee**	**Approved**
FLOOR INGO							
WALL							
CEILING FLOOR FIN							
HVAC							
ELECTRICAL							
PLUMBING							
SPRINKLERS							

NOTE

CEILING HEIGHT MAY BE ABOVE INTERTENANCY PARTITION, AT **LESSEE'S** COST, AND **ONLY** WITH **LESSOR'S** APPROVAL.

LESSEE'S SHOPFRONT IS NOT TO BE ATTACHED TO, OR, SUPPORTED FROM **LESSOR'S** BULKHEAD.

ALL **LESSEE'S** WORK TO BE SUPPORTED ONLY FROM STRUCTURE OVER.

NO SOLID WORK SHALL EXTEND BEYOND A HEIGHT OF 1350mm FROM FFL.

LEASE PLAN SHOP 178

Rev.	Date	Description
01	21.09.99	ACT NOW

Architects in Association

FM & ASSOCIATES DESIGN PTY LTD
ARCHITECTS — BUILDING PROJECT CONSULTANTS
24/106 Bundall Rd, Bundall QLD 4217 A.C.N. 070 418 130

HAYSOM SPENDER
LEVEL ONE 95 EDWARD STREET
BRISBANE QUEENSLAND 4000
AUSTRALIA
TELEPHONE 617) 3229 8088
FACSIMILE 617) 3229 6616
EMAIL HSA @
HAYSOMSPENDER.COM.AU

Westfield Design and Construction Pty. Limited
100 WILLIAM STREET, SYDNEY N.S.W.
Postal Address: G.P.O. BOX 4004, SYDNEY 2001
A.C.N. 000 267 265
Telephone : (02) 9358 7700
Fax Num. :

DATE MAR 1999

Project Architect | Checked | Design by | Drawn by HSA

project: WESTFIELD SHOPPINGTOWN - CHERMSIDE

title: LEASE PLAN SHOP 178
LEVEL 1 - ELEVATIONS & SECTIONS

Scale	Project/Job No.	Computer Ref.	Drawing Number
1:100	15016	LP\CD\S-S\	LP1178-3
Library Ref. J:\CS\	Scheme OFFICE COPY	Date Plotted 20.06.2000	Revision 01

Haysom Spender Architects.
CAD File Name - J:\CS\LP\CD\S-S\Lp1178-3.dwg - 20.06.2000 - 3:05pm EST - XREF LIST: LPNOTE02, LPNOTE03, ZEL1, ZE---GRD, ZFL1, ZJL1, ZSL1-COL, ZEL1-ST, BOUND.

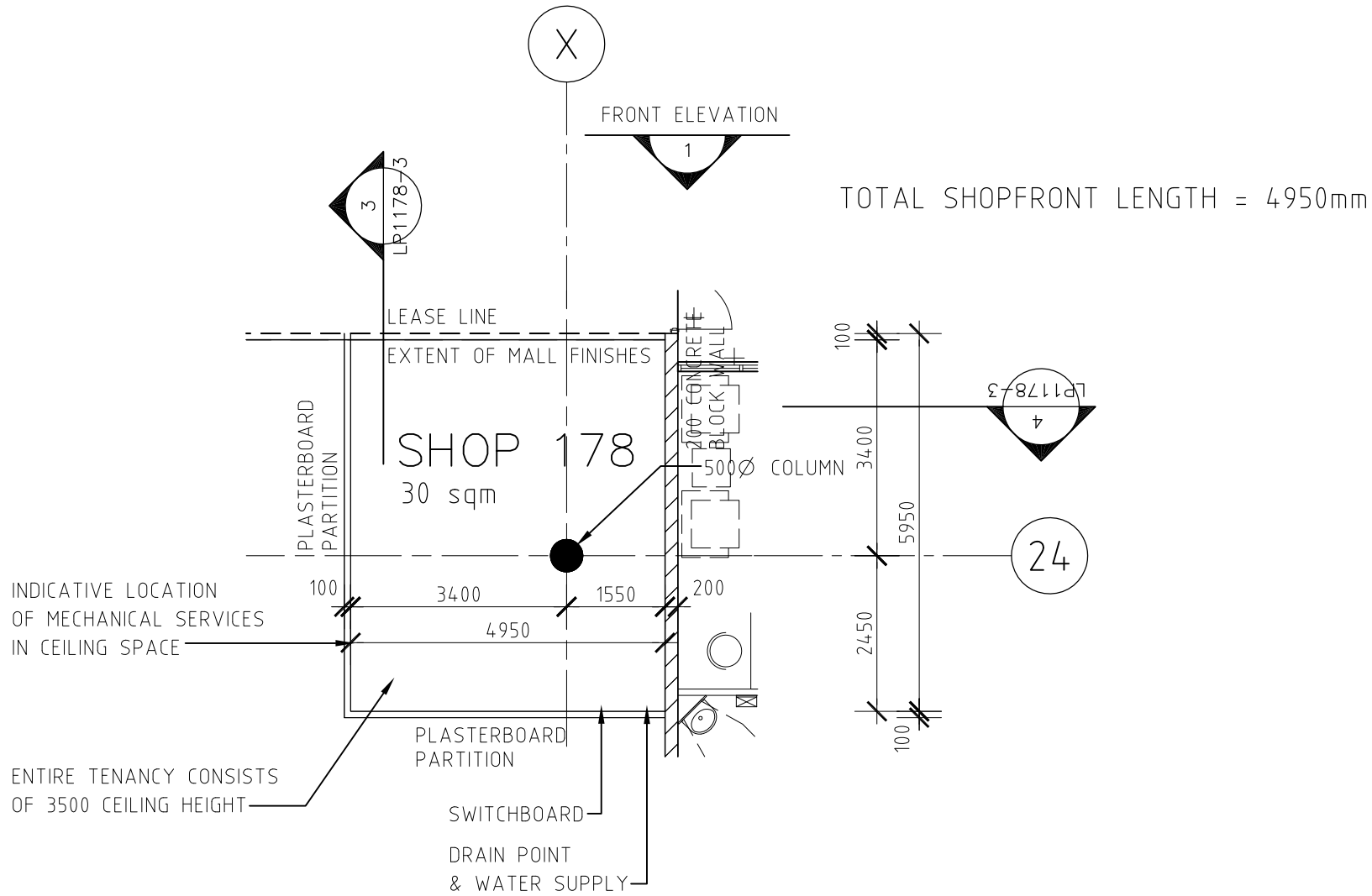

ANY REFRIGERATION PLANT IS TO BE LOCATED AS DIRECTED BY WESTFIELD.

EXACT LOCATION OF AIR REGISTERS SHALL BE VERIFIED ON SITE AND INCORPORATED INTO THE SHOPFRONT DESIGN BY THE LESSEE TO THE LESSOR'S APPROVAL.

10pr 190hX135X45d FDP (TELEPHONE) BOX BY LESSOR. 1000mm FROM FLOOR TO U/S.

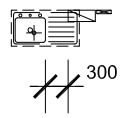

NB - EDGE OF SWITCH BOARD MUST BE MORE THAN 300mm FROM EDGE OF SINK BOWL.

SINK BENCH AND CABINET BY LESSEE 50mm SINK BENCH WASTE POINT BY LESSOR 20Ø CW SUPPLY AT STOP COCK IN CEILING SPACE ABOVE SINK.

LESSEE'S SHOPFRONT IS NOT TO BE ATTACHED TO, OR SUPPORTED FROM LESSOR'S BULKHEAD ALL LESSEE'S WORKS TO BE SUPPORTED ONLY FROM MAIN STRUCTURE OVER.

CEILING HEIGHT MAY BE ABOVE INTERTENANCY PARTITION, AT LESSEE'S COST WITH LESSOR'S APPROVAL.

THE LESSEE IS TO CHECK ALL DIMENSIONS AND DETAILS SHOWN ON THESE DRAWINGS BEFORE COMMENCING ANY WORKS.

ANY DISCREPANCIES ARE TO BE ADVISED TO WESTFIELD'S SMALL SHOPS ARCHITECTS.

LEASE PLAN SHOP 178

Lessee -		Phone -	Contact -		Phone -		
Item	**Work Required**			**Costed by**	**Westfield**	**Lessee**	**Approved**
FLOOR INGO							
WALL							
CEILING FLOOR FIN							
HVAC							
ELECTRICAL							
PLUMBING							
SPRINKLERS							

Rev.	Date	Description
01	21.09.99	ACT NOW

Architects in Association

FM & ASSOCIATES DESIGN PTY LTD
ARCHITECTS — BUILDING PROJECT CONSULTANTS
24/106 Bundall Rd, Bundall QLD 4217 A.C.N. 070 418 130

HAYSOM SPENDER
LEVEL ONE 95 EDWARD STREET
BRISBANE QUEENSLAND 4000
AUSTRALIA
TELEPHONE 617) 3229 8088
FACSIMILE 617) 3229 6616
EMAIL HSA @
HAYSOMSPENDER.COM.AU

Westfield Design and Construction Pty. Limited
100 WILLIAM STREET, SYDNEY N.S.W.
Postal Address: G.P.O. BOX 4004, SYDNEY 2001
A.C.N. 000 267 265
Telephone : (02) 9358 7700
Fax Num. :
DATE FEB 1999

Project Architect | Checked | Design by | Drawn by HSA

project: WESTFIELD SHOPPINGTOWN - CHERMSIDE

title: LEASE PLAN SHOP 178
LEVEL 1 - FLOOR PLAN

Scale	Project/Job No.	Computer Ref.	Drawing Number
1:100	15016	LP\CD\S-S\	LP1178-2
Library Ref. J:\CS\	Scheme OFFICE COPY	Date Plotted 20.06.2000	Revision 01

Haysom Spender Architects.
CAD File Name - J:\CS\LP\CD\S-S\Lp1178-2.dwg - 20.06.2000 - 3:05pm EST - XREF LIST: ZS---GRD, ZSL1-COL, LPNOTE01, LPNOTE03, ZEL1, ZSL1-MEC, ZHL1, L1-AREA, ZFL1, ZJL

BACKGROUND
PMS 123

CMYK:
0C
30.5M
94Y
0K

BLUE
PANTONE
REFLEX BLUE

CMYK:
100C
72M
0Y
6K

GREEN
PANTONE 3405

CMYK:
83C
0M
65Y
0K

For more information please contact
Tara Clark
Retail Operations Manager
tclark@peerless.net.au
0439 280 111